BILS DRAWINGS

NWS-J075-DR1000	BALLOON INFLATION AND LAUNCH SHELTER (BILS)
NWS-J075-DR2010	BILS SHELTER CONTROL SYSTEM WIRING DIAGRAM

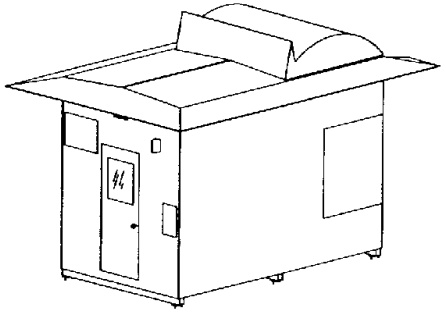

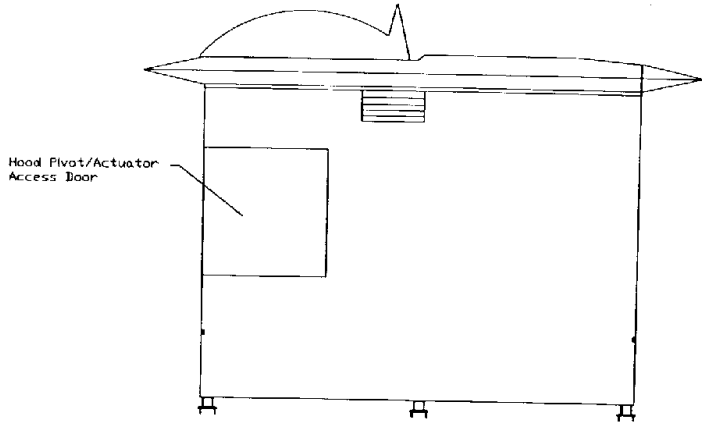

ELEVATION B

NOTES:

1. OPENING FOR HVAC UNIT TO BE SIZED TO FIT WITH VENDOR ITEM SELECTED IN ACCORDANCE WITH SPECIFICATIONS.
2. NOT USED
3. NOT USED
4. HOLE FOR AIR INTAKE SHALL BE PLACED AND SIZED IN ACCORDANCE WITH MANUFACTURER SPECIFICATION.
5. 4 FT. (2) 40-WATTS LAMP LOW PROFILE -HINGED WRAP-AROUND FIXTURE W/ PRISMATIC ACRYLIC LENSE. INCLUDE THERMALLY PROTECTED, 120V BALLAST SHALL BE UL LISTED.
6. LIGHT TO BE RECESSED IN CORNERS, SEALED, AND ACCESSED FROM STORAGE AREA SIDE OF INTERIOR WALL.
7. NOT USED
8. AIR FOILS SHALL BE REMOVEABLE FOR SHIPPING AND STORAGE. SEE SPECIFICATION.
9. SIZE AND SPECIFICATION TO BE DETERMINED BY CONTRACTOR.

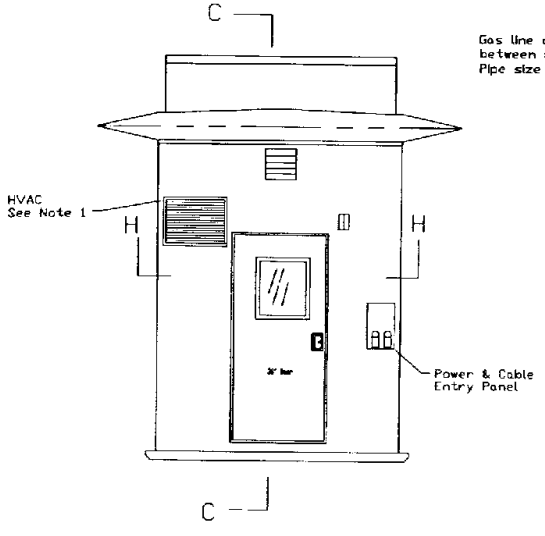

ELEVATION A

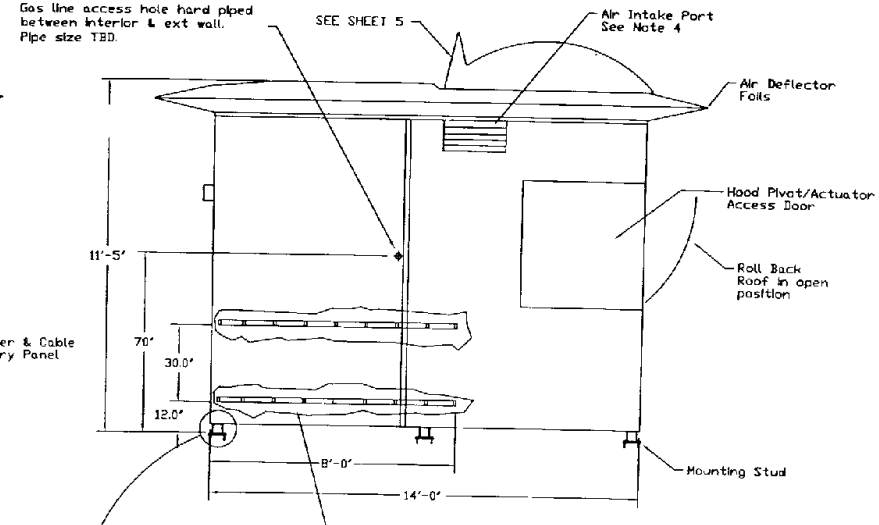

ELEVATION D

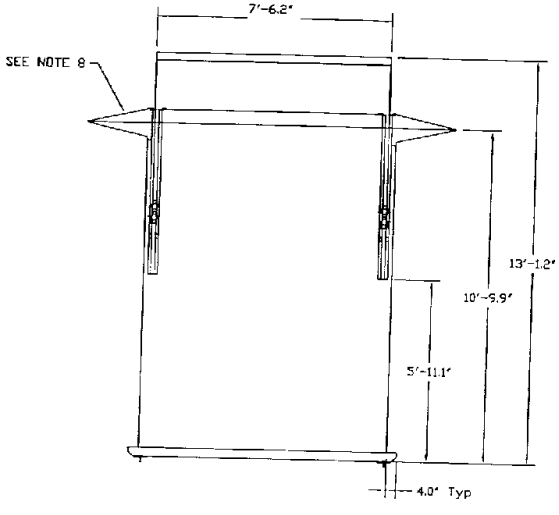

ELEVATION C

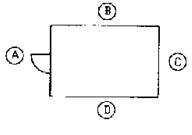

ELEVATION KEY

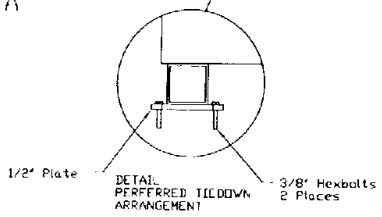

DWG NO.	BILS3
SH	1

REVISIONS

LTR	DESCRIPTION	DATE	APPROVAL

UNLESS OTHERWISE SPECIFIED DIMENSIONS ARE IN INCHES DO NOT SCALE DRAWING

TOLERANCES: XX DECIMALS ± .01; XXX DECIMALS ± .005; ANGLES ± 1.0

SURFACE FINISH 250√; BREAK SHARP EDGES .03 TO .06; FILLET RADII .01

INTERPRET DRAWING IAW DOD-STD-100

DO NOT SCALE THIS DRAWING

CONTRACT NO.

APPROVALS		DATE
DRAWN	LHB	05/09/96
CHECKED	-	-
ENGR	-	-
APPROVED	-	-
APPROVED	-	-

NEXT ASSY	USED ON
X	
X	X

APPLICATION

NATIONAL WEATHER SERVICE ENGINEERING DIVISION
SILVER SPRING, MARYLAND 20910

BALLOON INFLATION AND LAUNCH SHELTER (BILS)

SIZE	CAGE CODE	DWG NO.	REV
D	34157	NWS-J075 DR1000	-

SCALE: 1/25 WEIGHT: X SHEET 1 OF 5

DWG NO. BILS3 SH 2

REVISIONS

LTR	DESCRIPTION	DATE	APPROVAL

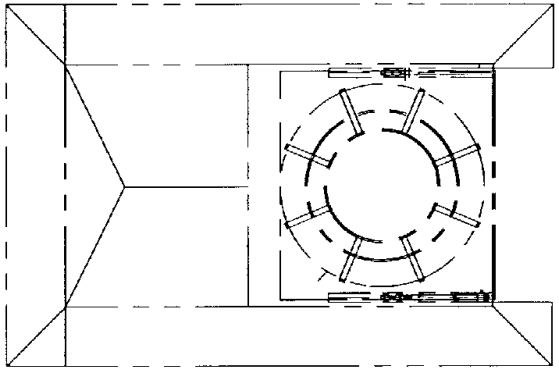

PLAN VIEW

VIEW SHOWN WITH ROLL BACK ROOF REMOVED

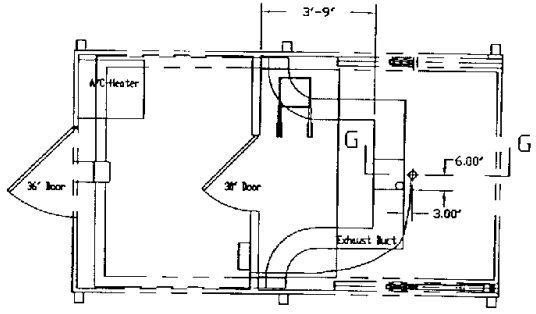

SECTION A-A

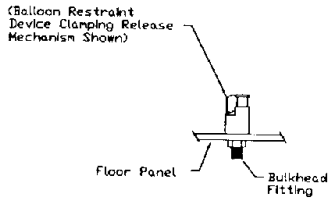

SECTION G-G

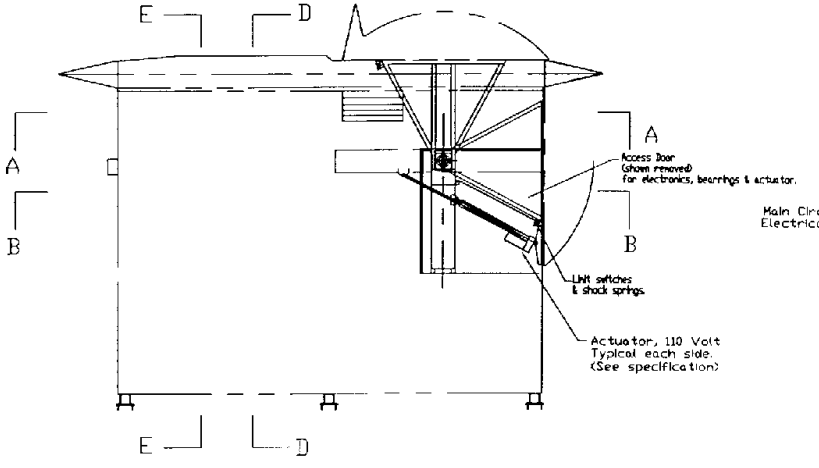

VIEW OF HOOD IN UP & DOWN POSITIONS

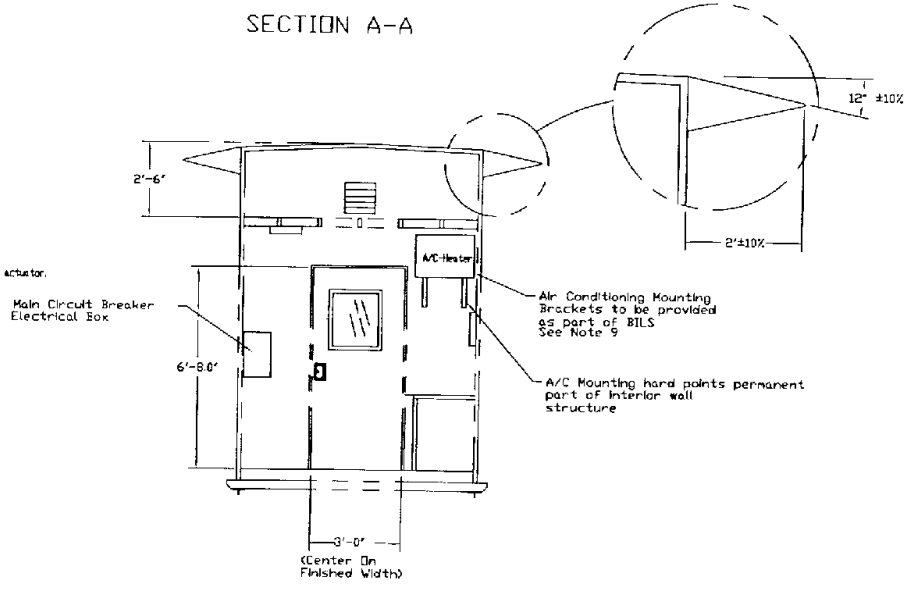

SECTION E-E

SIZE	CAGE CODE	DWG NO.
D	34157	NWS-J075 DR1000

SCALE: 1/25 SHEET 2 OF 5

DWG NO.	SH
BILS3	3

REVISIONS

LTR	DESCRIPTION	DATE	APPROVAL

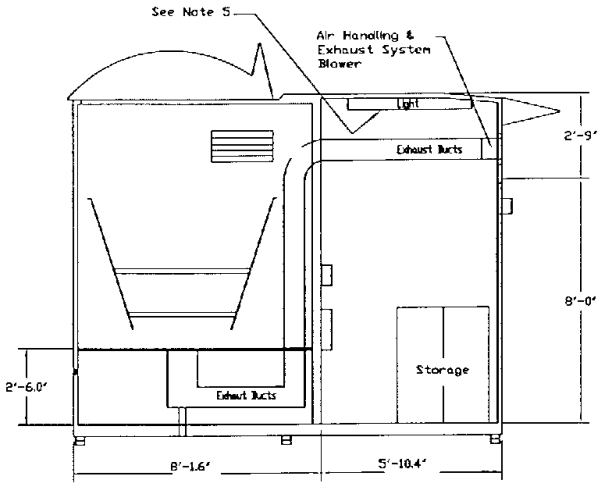

SECTION F - F

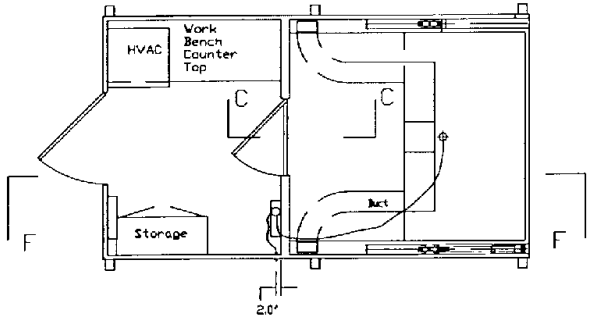

SECTION B-B

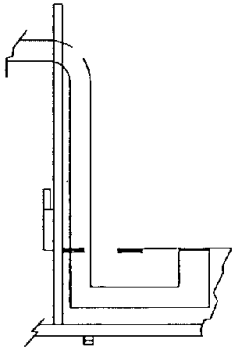

SECTION C-C

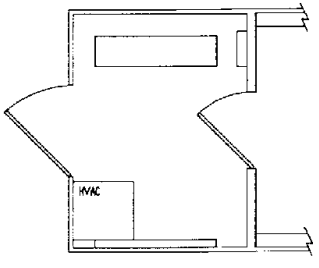

PARTIAL SECTION H-H

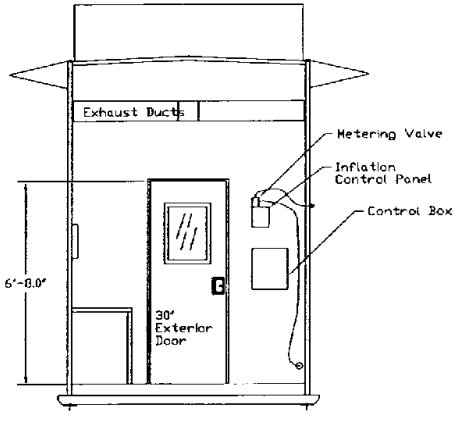

SECTION D-D

SIZE	CAGE CODE	DWG NO.
D	34157	NWS-J075-DR1000

SCALE: 1/25 SHEET 3 OF 5

DWG NO.	BILS3	SH 4

REVISIONS

LTR	DESCRIPTION	DATE	APPROVAL

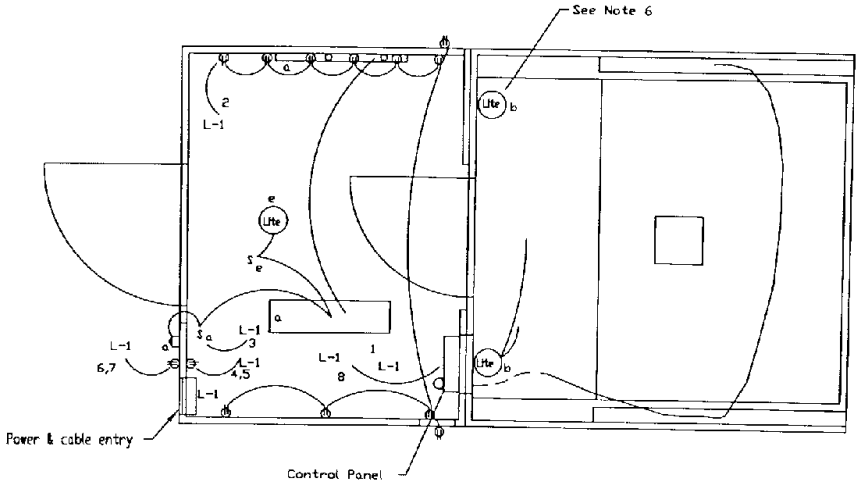

ELECTRICAL PLAN VIEW

Scale: NTS

LEGEND

- Duplex 120V 15A Recepticle
- Single Pole Switch
- Exterior Lamp
- Interior Fluorescent Light
- Connection
- Home Run To Panel
- Interior Incandescent Light
- Actuator Electrical Run
- Phone Jack
- L-1 Power Distribution Box

SIZE	CAGE CODE	DWG NO.
D	34157	NWS-JU75-DR1000

SCALE: 1/25 SHEET 4 OF 5

DWG NO.	SH.
BILS3	5

REVISIONS

LTR	DESCRIPTION	DATE	APPROVAL

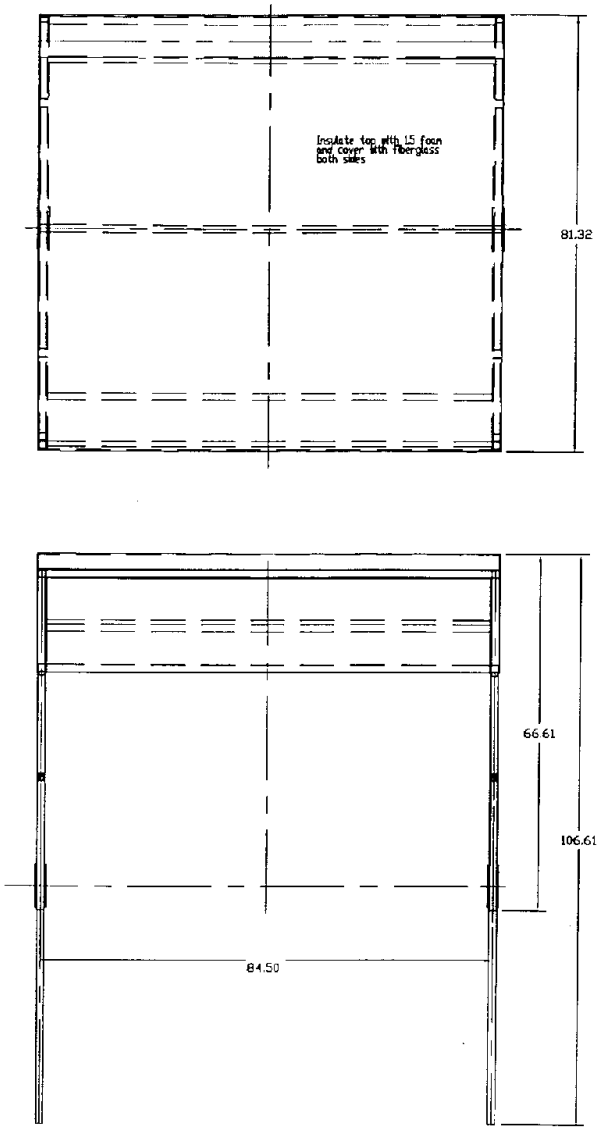

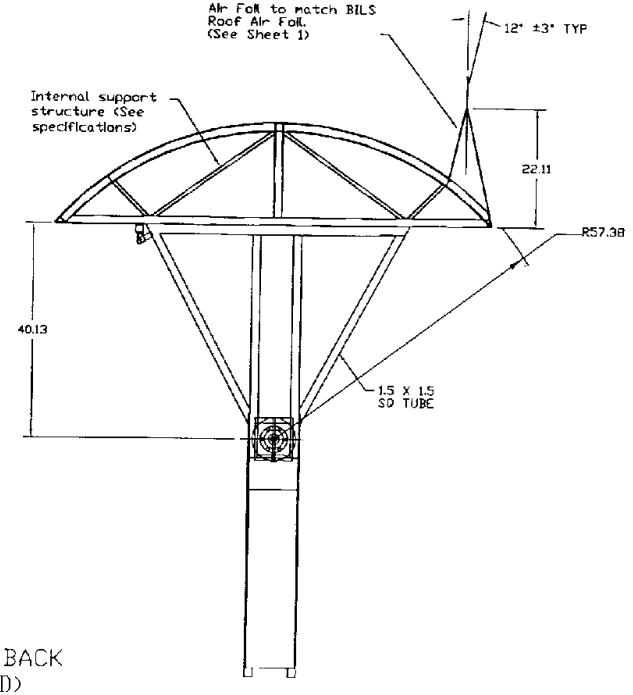

TYPICAL ROLLBACK
ROOF (HOOD)
SCALE: 1/12

SIZE	CAGE CODE	DWG NO.
D	34157	NWS-J075-DR1000

SCALE: 1/25 SHEET 5 OF 5

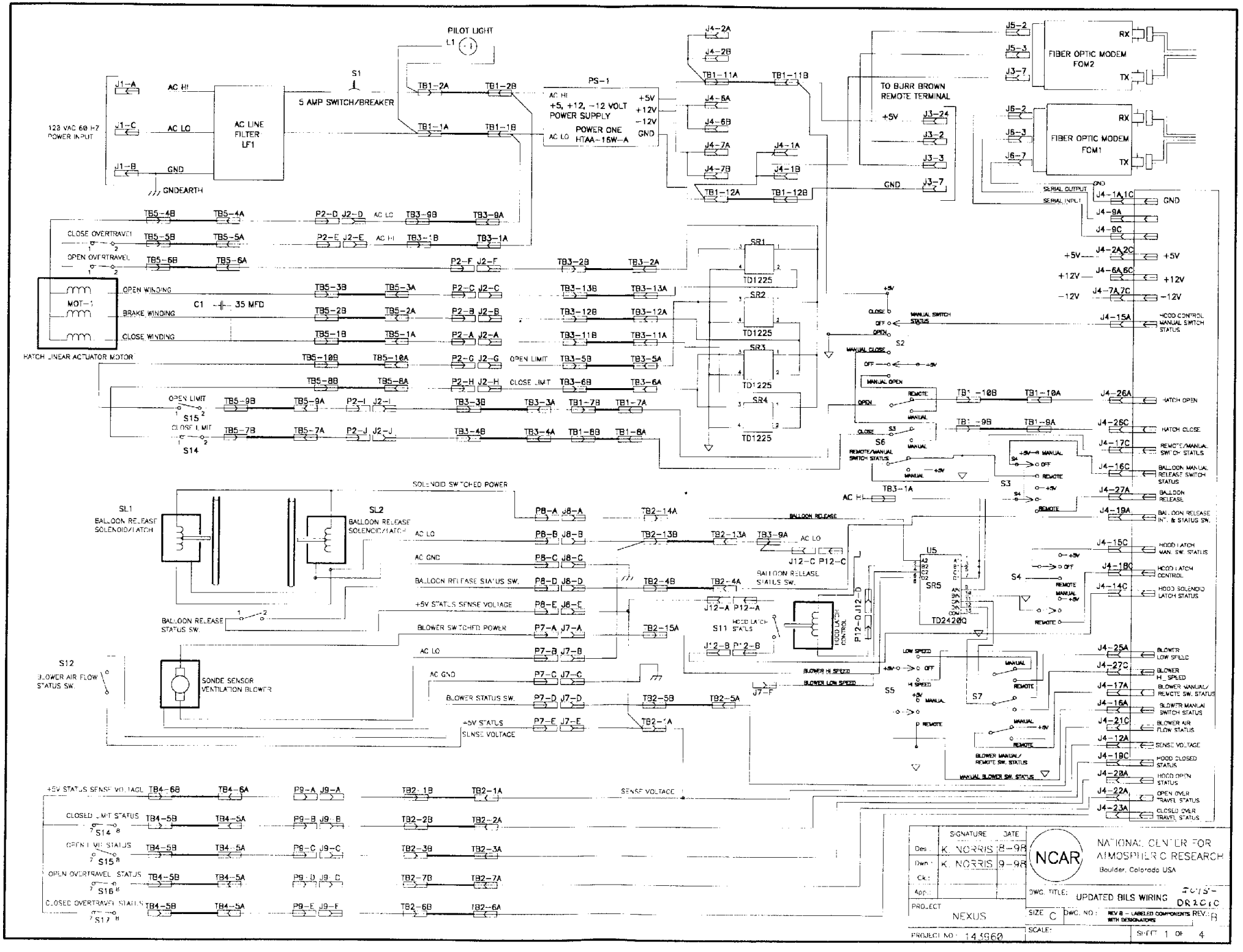
PILOT LIGHT
L1
S1
5 AMP SWITCH/BREAKER
120 VAC 60 HZ POWER INPUT
AC HI
AC LO
GND
GNDEARTH
AC LINE FILTER LF1
PS-1
+5, +12, -12 VOLT POWER SUPPLY
POWER ONE HTAA-15W-A
+5V
+12V
-12V
TO BURR BROWN REMOTE TERMINAL
FIBER OPTIC MODEM FOM2
FIBER OPTIC MODEM FOM1
RX
TX
SERIAL OUTPUT
SERIAL INPUT
MOT-1
HATCH LINEAR ACTUATOR MOTOR
OPEN WINDING
BRAKE WINDING
CLOSE WINDING
C1 35 MFD
CLOSE OVERTRAVEL
OPEN OVERTRAVEL
OPEN LIMIT
CLOSE LIMIT
S15
S14
SR1
SR2
SR3
SR4
TD1225
S2
S6
S3
S4
S5
S7
S11
U5
SR5
TD2420Q
HOOD LATCH CONTROL
SOLENOID SWITCHED POWER
SL1
BALLOON RELEASE SOLENOID/LATCH
SL2
BALLOON RELEASE
BALLOON RELEASE STATUS SW.
+5V STATUS SENSE VOLTAGE
BLOWER SWITCHED POWER
S12
BLOWER AIR FLOW STATUS SW.
SONDE SENSOR VENTILATION BLOWER
BLOWER STATUS SW.
SENSE VOLTAGE
HOOD CONTROL MANUAL SWITCH STATUS
HATCH OPEN
HATCH CLOSE
REMOTE/MANUAL SWITCH STATUS
BALLOON MANUAL RELEASE SWITCH STATUS
BALLOON RELEASE
BALLOON RELEASE INT. & STATUS SW.
HOOD LATCH MAN. SW. STATUS
HOOD LATCH CONTROL
HOOD SOLENOID LATCH STATUS
BLOWER LOW SPEED
BLOWER HI SPEED
BLOWER MANUAL/ REMOTE SW. STATUS
BLOWER MANUAL SWITCH STATUS
BLOWER AIR FLOW STATUS
SENSE VOLTAGE
HOOD CLOSED STATUS
HOOD OPEN STATUS
OPEN OVER TRAVEL STATUS
CLOSED OVER TRAVEL STATUS
+5V STATUS SENSE VOLTAGE
CLOSED LIMIT STATUS
OPEN LIMIT STATUS
OPEN OVERTRAVEL STATUS
CLOSED OVERTRAVEL STATUS
SIGNATURE DATE
Des: K. NORRIS 8-98
Dwn: K. NORRIS 9-98
Ck:
App:
PROJECT NEXUS
NCAR
NATIONAL CENTER FOR ATMOSPHERIC RESEARCH
Boulder, Colorado USA
DWG. TITLE: UPDATED BILS WIRING
SIZE C
DWG. NO: REV B - LABELED COMPONENTS WITH DESIGNATORS
REV: B
SCALE:
PROJECT NO: 143860
SHEET 1 OF 4

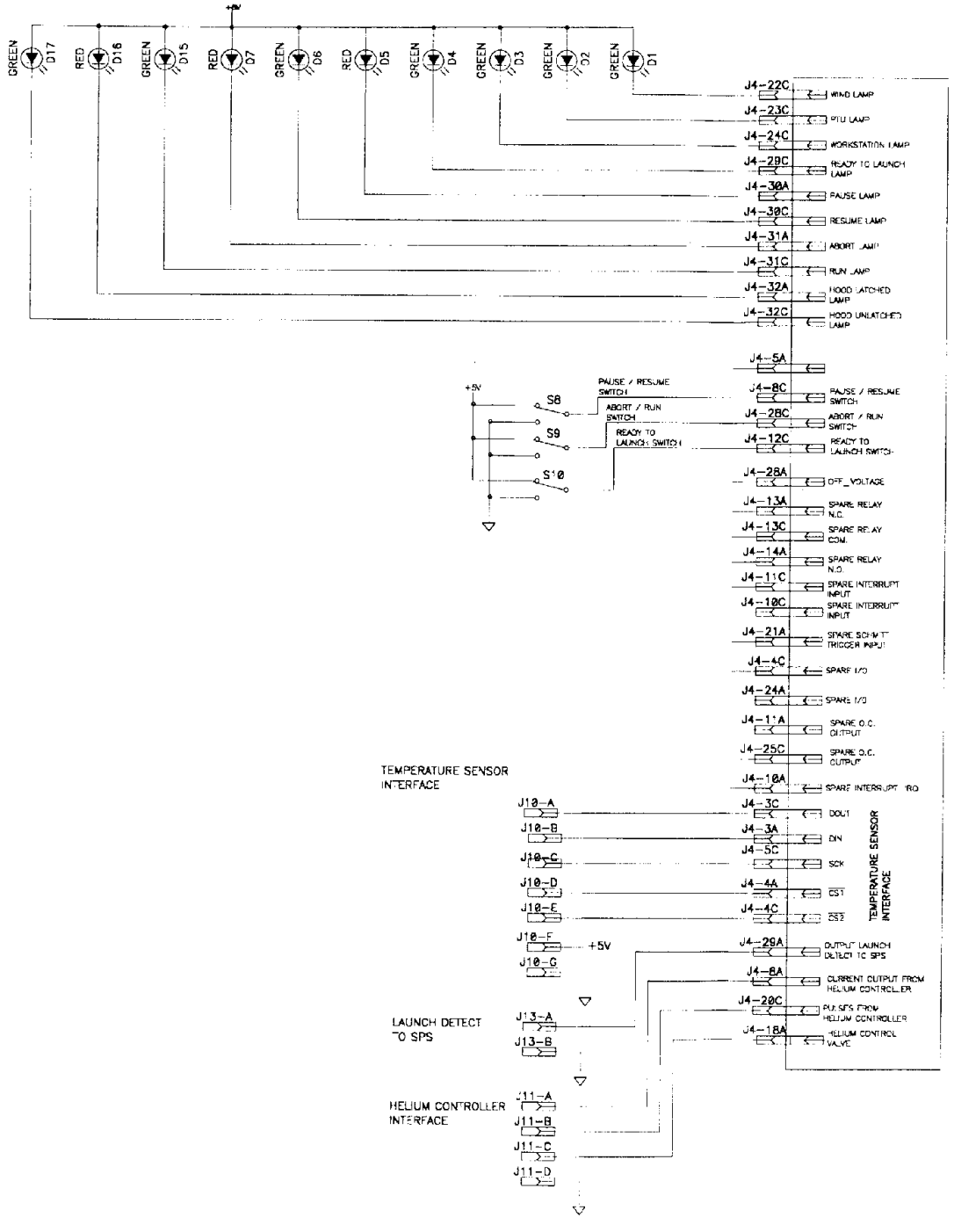

	SIGNATURE	DATE
Des.:	K. NORRIS	8-98
Dwn.:	K. NORRIS	9-98
Ck.:		
App.:		

NCAR

NATIONAL CENTER FOR ATMOSPHERIC RESEARCH
Boulder, Colorado USA

DWG. TITLE: UPDATED BILS WIRING DIAGRAM

PROJECT: NEXUS

SIZE | DWG. NO.: J075-DR1010 | REV: B

SCALE:

PROJECT NO.: 143960

SHEET 2 OF 4

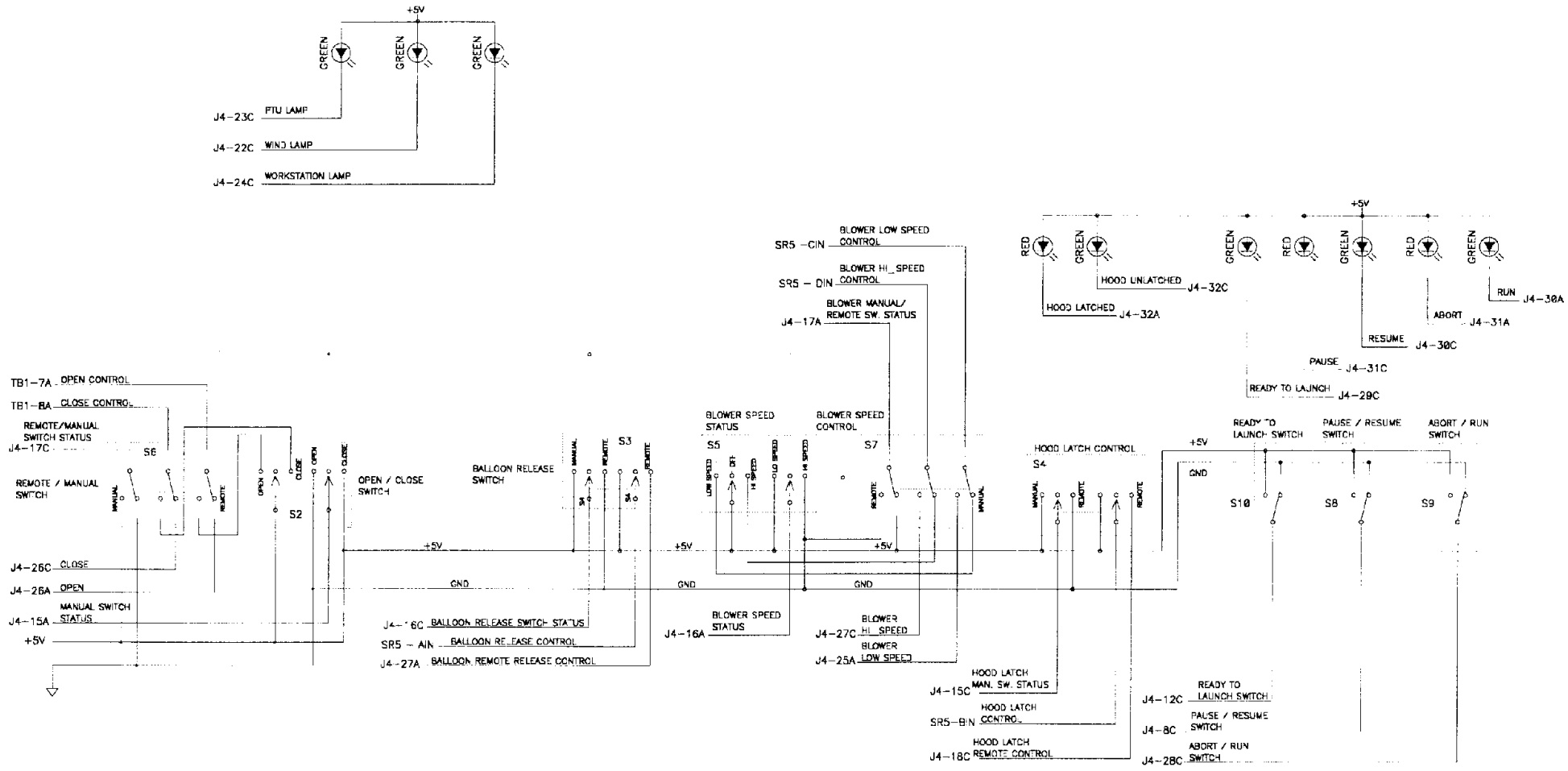

	SIGNATURE	DATE
Des.:	K. NORRIS	8-98
Dwn:	K. NORRIS	9-98
Ck.:		
App.:		

NCAR — NATIONAL CENTER FOR ATMOSPHERIC RESEARCH, Boulder, Colorado USA

PROJECT: NEXUS

DWG. TITLE: UPDATED BILS WIRING

SIZE: C DWG. NO.: J075-DR2010 REV: B

PROJECT NO.: 43960

SCALE:

SHEET 3 OF 4

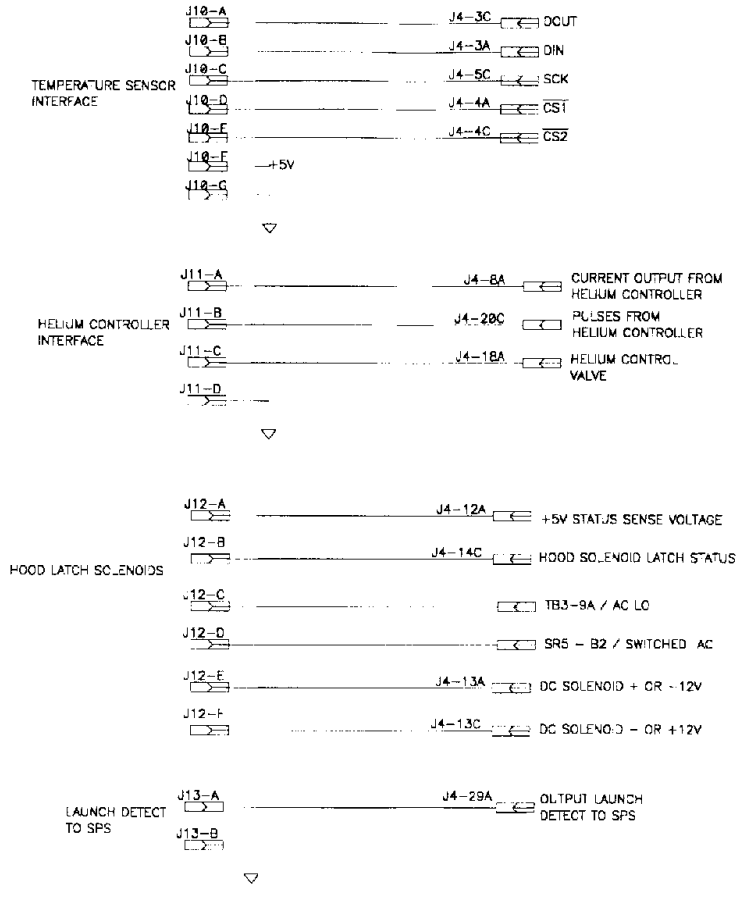

	SIGNATURE	DATE
Des.:	K. NORRIS	8-98
Dwn.:	K. NORRIS	9-98
Ck.:		
App.:		

PROJECT: NEXUS

PROJECT NO.: 43960

NCAR — NATIONAL CENTER FOR ATMOSPHERIC RESEARCH, Boulder, Colorado USA

DWG. TITLE: UPDATED BUS WIRING

SIZE: C | DWG. NO.: JC75-DR2010 | REV: B

SCALE:

SHEET 4 OF 4